A3

14

Design data			
Vessels category		Normal Pressure	
Description of parameter		Vessel	Jacket
Working pressure	bar	1.5	3
Design pressure	bar	1.5	3
Level testing pressure	bar	3	4
Medium		Beer	
Working temperature	℃	−10 to +40 ℃	
Design temperature	℃	−10 to +40 ℃	
Gross volume	BBL	8	
Net volume	BBL	6.5	
Heat exchanger area	m^2	2.2	
Insulation material		PU	
Insulation thickness	mm	80	

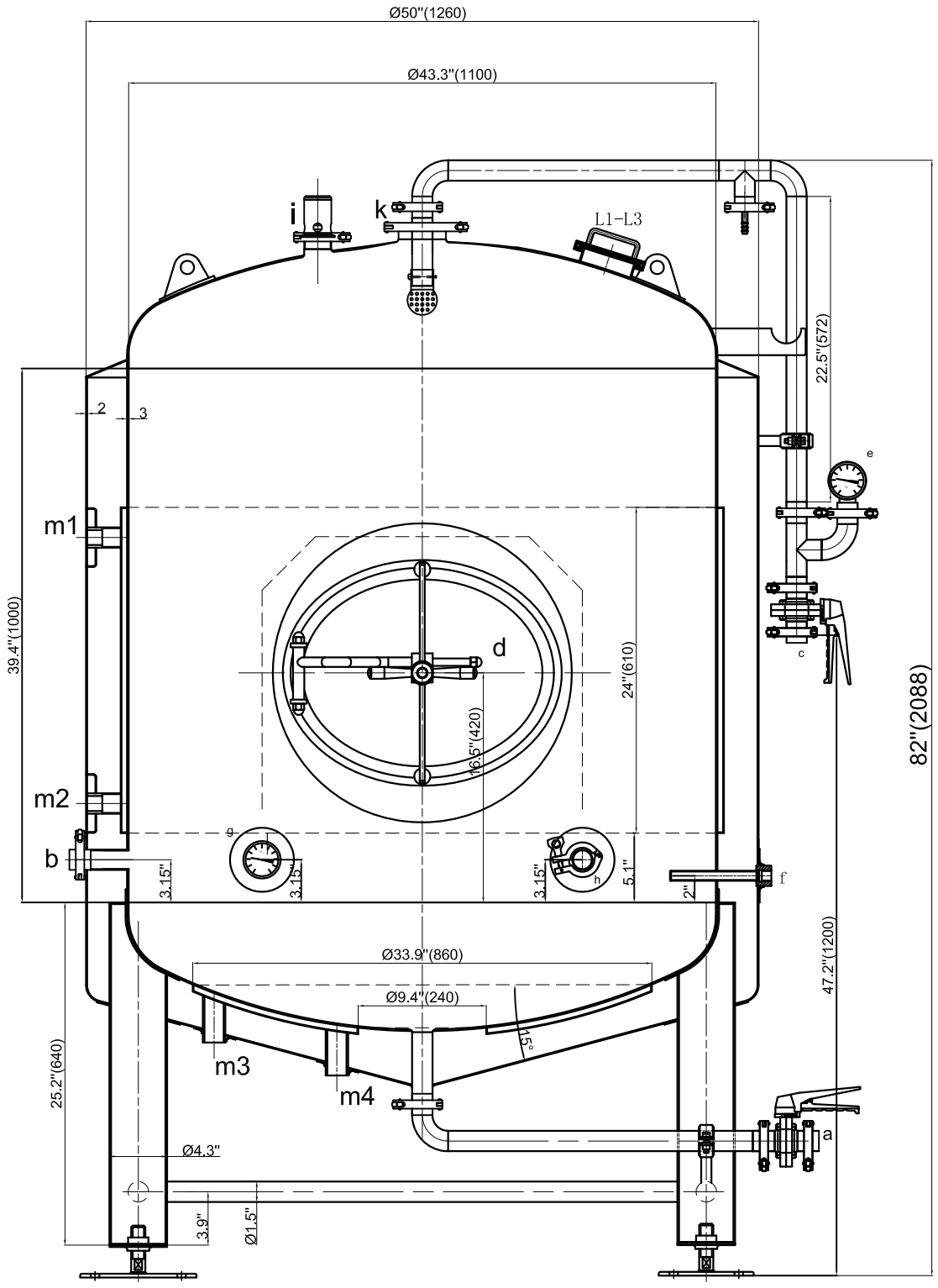

Level Gauge

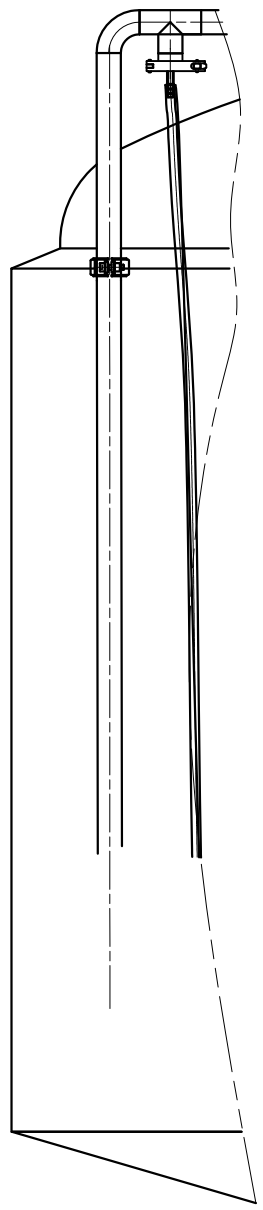

Level Gauge

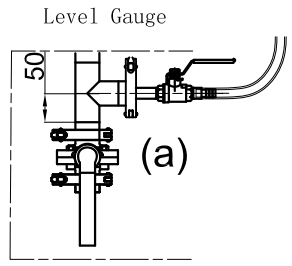

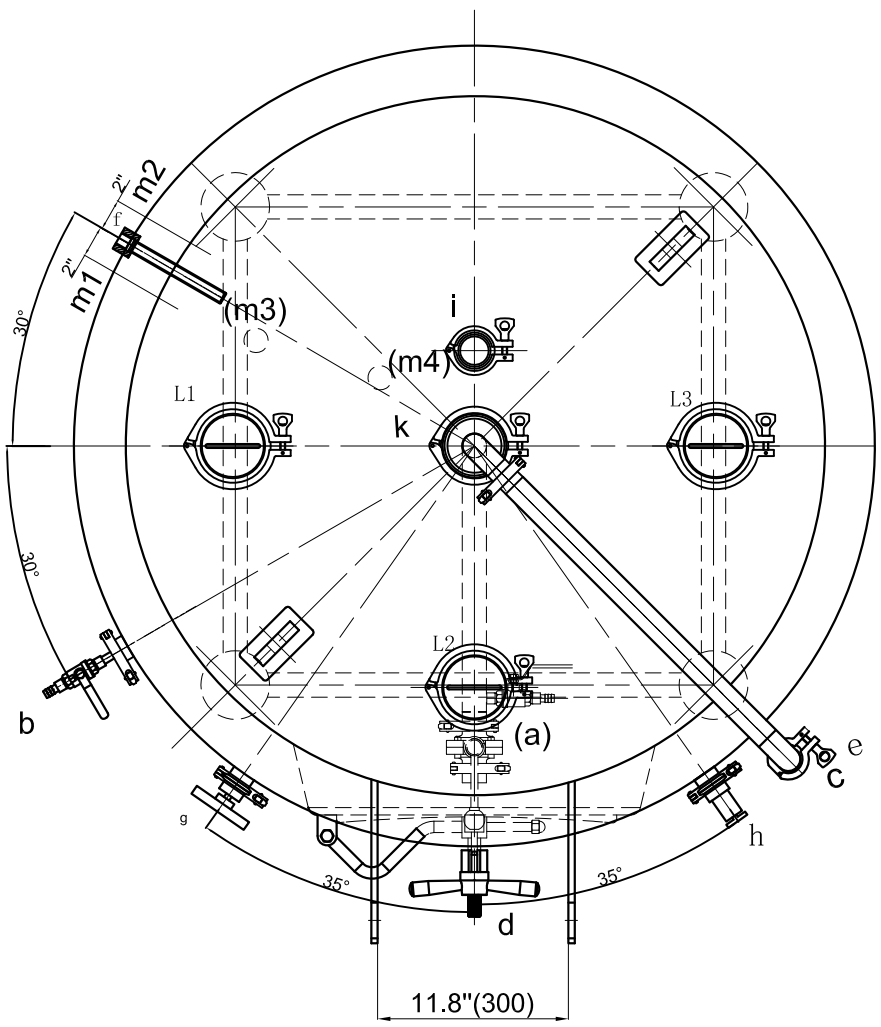

8bbl Brite Tank				
a	2"	Beer Outlet	φ50.8×1.5	Tri-Clamp
b	1.5"	Carbstone	φ38.1×1.5	Tri-Clamp
c	1.5"	CIP Inlet	φ38.1×1.5	Tri-Clamp
d	Φ530	Manhole	530×430×133	Weld
e	1.5"	Pressure Gauge	φ38.1×1.5	Tri-Clamp
f	1/2"	Thermocouple	NPT1/2″	FNPT
g	1.5"	Thermometer	φ38.1×1.5	Tri-Clamp
h	1.5"	Sample Valve	φ38.1×1.5	Tri-Clamp
i	2"	PVRV	φ50.8×1.5	Tri-Clamp
j	1.5"-3/8"	Level guage Port	φ38.1-3/8"	Tri-Clamp
k	3"	Port	φ76.2×2	Tri-Clamp
L1-L3	4"	Port	φ101.6×2	Tri-Clamp
m1-m4	3/4"	Glycol Ports	NPT3/4″	FNPT

8