Jan. 25, 1966 W. J. PODBIELNIAK 3,231,183

CENTRIFUGAL COUNTERCURRENT CONTACT APPARATUS AND PROCESS

Filed Dec. 14, 1962 2 Sheets-Sheet 1

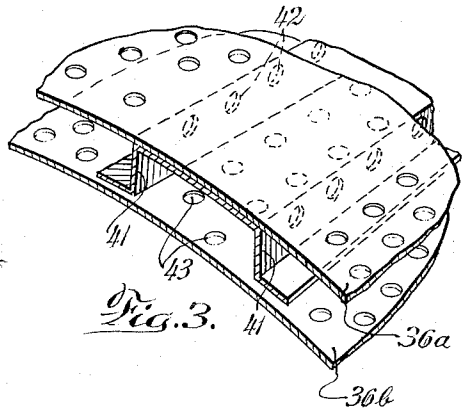

Fig. 3.

Fig. 4.

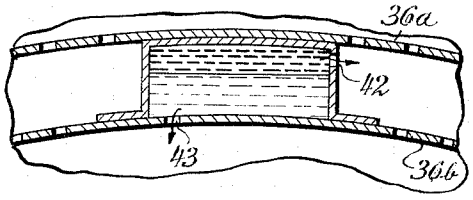

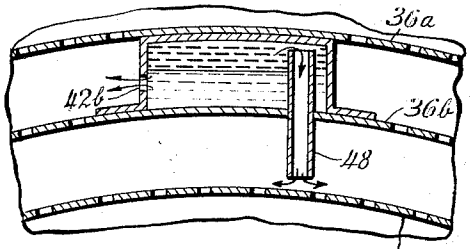

Fig. 6.

Fig. 5.

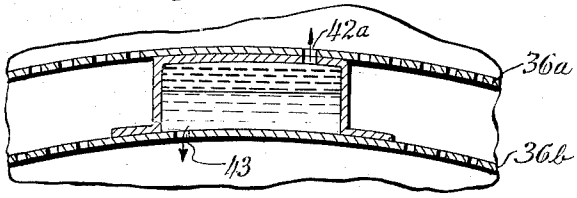

Fig. 1.

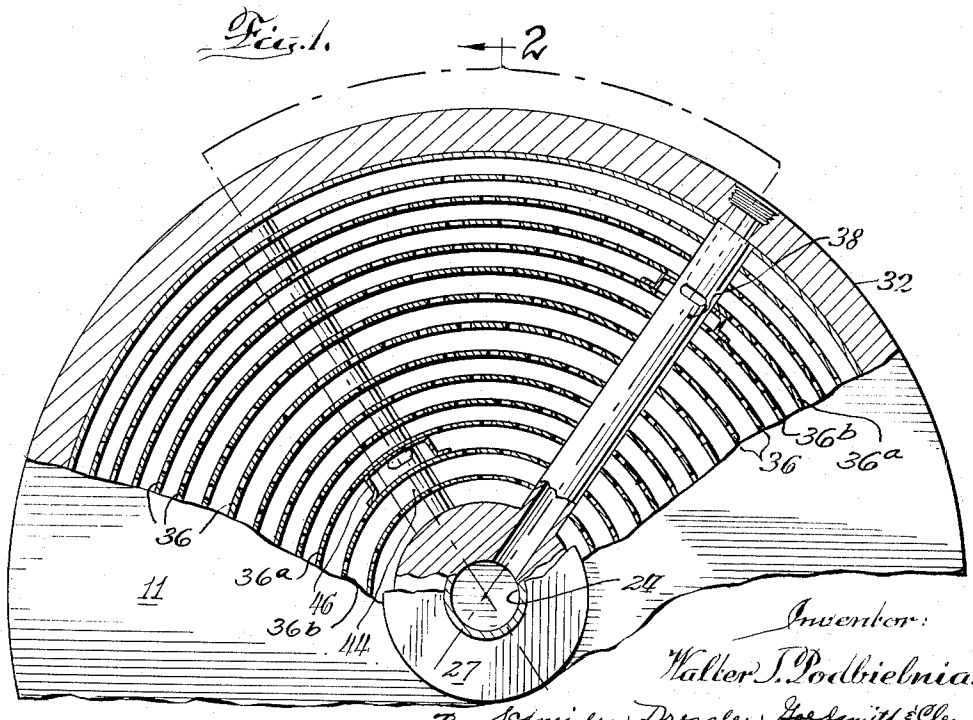

Inventor:
Walter J. Podbielniak
By Schneider, Dressler, Goldsmith & Clement
Attorneys.

CENTRIFUGAL COUNTERCURRENT CONTACT APPARATUS AND PROCESS

Filed Dec. 14, 1962 2 Sheets-Sheet 2

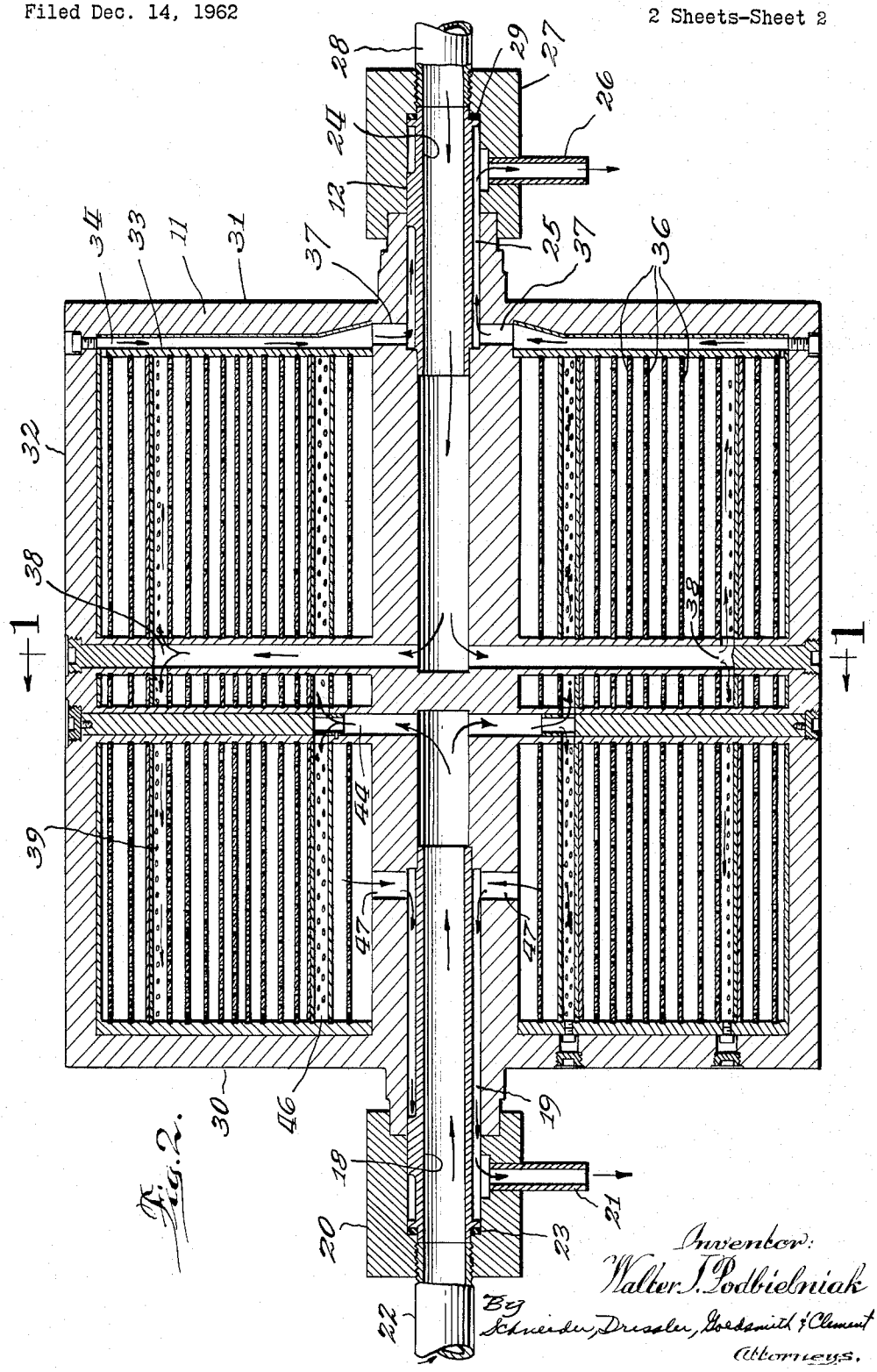

Fig. 2.

Inventor:
Walter J. Podbielniak
By
Schneider, Dressler, Goldsmith & Clement
Attorneys.

United States Patent Office

3,231,183

Patented Jan. 25, 1966

1

3,231,183
CENTRIFUGAL COUNTERCURRENT CONTACT APPARATUS AND PROCESS

Walter J. Podbielniak, Chicago, Ill., assignor to Dresser Industries, Inc., a corporation of Delaware

Filed Dec. 14, 1962, Ser. No. 244,831
20 Claims. (Cl. 233—15)

This invention relates to improvements to centrifugal countercurrent contact apparatus and in processes wherein two immiscible liquids of different densities are brought into countercurrent contact with each other in such apparatus.

Centrifugal countercurrent contact apparatus having an interior working space and having concentric perforated rings or a perforated spiral to provide barriers to radial flow within the working space are well known in the art. A typical apparatus utilizing concentric rings is described in my U.S. Patent No. 2,670,132 of February 23, 1954. A typical centrifugal countercurrent contact apparatus using a perforated spiral to provide the barriers is shown and described in my U.S. Patent No. 2,286,157 of June 9, 1942.

In such centrifugal countercurrent contact apparatus there is a means for supplying lighter liquid to the interior of a rotor in the proximity of its periphery, a means for supplying heavier liquid to the rotor in the proximity of its axis and means for supplying and discharging heavier and lighter liquid from the rotor. There are seals provided between the stationary and rotatable elements of the supplying and discharging means.

In some instances, because of process requirements, it may be necessary or desirable to introduce an additional liquid into the system. In some cases, it may be necessary or convenient to introduce one of the liquids to be contacted in the system in an admixture with some other liquid.

The instant invention, in its several aspects permits additional liquids to be introduced into the system without the necessity of providing additional seals and also permits the purification of relatively impure starting liquids so that optimum countercurrent processing is permitted.

It is often desirable in a countercurrent contact process wherein a light liquid moves countercurrently to a heavier liquid to introduce a third liquid into the system for some process function. For example, it is often desirable to introduce a liquid known as an "anti-solvent" in a solvent extraction process in order to release from the solvent certain components which would otherwise remain in solution. In the countercurrent extraction of lubricating oil stock with phenol or furfural as the solvent, it is desirable to contact the solvent extract stream, downstream of the point of introduction of the oil, with water to release or "spring" some paraffinic constituents from the phenolic or furfural extract. This invention provides a convenient means of introducing an additional liquid stream into the working space of the contact apparatus without the necessity of having an additional seal. For convenience, this invention will be described with respect to a process for contacting lubricating oil stock with phenol and with water, as an additional stream, although, as will appear hereinafter, the invention is capable of advantageous use in other applications.

Also for convenience, this invention will be described with reference to the figures, of which:

FIGURE 1 is a partial cross section of the countercurrent contact apparatus through a radial tube, taken along line 1—1 of FIG. 2;

FIG. 2 is a diagrammatic longitudinal section of the countercurrent apparatus taken on lines 2—2 of FIG. 1 with the planes of the radial tubes brought into alignment with each other to clearly show the flow;

FIG. 3 is a detail of one form of manifold 39 of FIGS. 1 and 2;

FIG. 4 is a detail of a cross section of the manifold 39 of FIGS. 1 and 2 in accordance with the embodiment of FIG. 3;

FIG. 5 is a detail of a cross section of the manifold 39 of FIGS. 1 and 2 in accordance with another embodiment thereof; and

FIG. 6 is a detail of a cross section of the manifold 39 of FIGS. 1 and 2 in an embodiment based on different process requirements from the embodiments of FIGS. 4 and 5.

Referring to the drawings, and particularly FIGS. 1 and 2, rotor 11 includes rotatable shaft 12, mounted and driven to rotate at a high rate of speed, for example, from about 1,000 to about 5,000 r.p.m. or even higher. The shaft is maintained in a horizontal direction and serves as axis to the remainder of the rotor structure. The supporting means and mounting means are not shown. The heavier liquid is introduced at an inner point in the rotor and travels outwardly under the action of the centrifugal forces developed within the rotor and leaves at or near the outermost portion of the interior of the rotor. The lighter liquid is introduced under pressure at an outer point in the rotor and is forced inwardly through the rotor, against the outwardly traveling heavier liquid, to effect the desired countercurrent exchange or solvent action. The lighter liquid, after this process has been conducted, is withdrawn from an interior point within the rotor.

From the process described, it will be apparent that it is necessary to supply the heavier liquid and to withdraw the lighter liquid at points near the axis of the rotor; and that it will be necessary to supply the lighter liquid and remove the heavier liquid at points near the periphery of the rotor. For this purpose, shaft 12 is provided with two sets of internally concentric conduits, as illustrated in FIG. 2 of the drawings. As shown, the shaft 12 is provided internally at the left with concentric conduits, the inner being designated 18 and the annular conduit surrounding it being designated by the number 19. A stationary cap 20 is provided at the extreme left end of the shaft as shown in FIG. 2. Pipe 21 in cap 20 communicates with annular conduit 19. Inner conduit 18 communicates with a pipe through the end of cap 20 as indicated at 22, suitable sealing means 23 being provided to prevent intermixture between the light and heavy liquids. The heavy liquid enters the rotor through pipe 22 in cap 20 and passes into conduit 18. Light liquid which has already passed through the rotor leaves the rotor through annular conduit 19, passing out of pipe 21.

Similar conduits are provided in the opposite end of the shaft for supply of light liquid to the rotor and the removal of the heavy liquid from the rotor. Thus, as shown in FIG. 2, at the right, shaft 12 is provided with an internal conduit 24 surrounded by an annular conduit 25. The inner conduit 24 extends through the shaft and communicates with pipe 28 in stationary cap 27 into which the end of shaft 12 fits. The pipe 28 is for the supply of light liquid to the rotor. The annular conduit 25 leads to pipe 26 in cap 27 so that heavy liquid, after treatment, may be discharged from the rotor. A seal 29, similar to seal 23 at the opposite end of the shaft is provided between the end of the shaft 12 and the cap 27. The rotor, as illustrated in FIGS. 1 and 2, is formed as a cylindrical casing made up of two side plates or discs 30 and 31 and a peripheral cylindrical member 32 rigidly

secured to each other and to the shaft to form a closed chamber.

Within the side members or discs **30** and **31** of the rotor, and spaced from the latter to provide a small clearance of about 1/16 to about 1/8 inch, is spill-over plate **33**. The plate **33** is of lesser radius than the internal surface of cylindrical wall member **32** to provide an annular discharge passageway extending entirely around the edges of the spill-over plate **33**. The space **34** between disc **31** and spill-over plate **33** forms an inter-disc or inter-plate passageway which serves for the discharge of heavy liquid leaving the rotor. A plurality of conduits **37** communicate between space **34** and annular conduit **25** so that heavy liquid may be removed from the rotor.

Within the closed chamber, annular passageways of progressively increasing radius are provided. The passageways are preferably formed by concentric rings or bands **36** which are perforated to permit limited flow of liquid in a radial direction but which provide substantial barriers to such flow. The distance between the bands may vary considerably from about 0.15 inch to about 2 inches depending on the physical properties of the liquids to be contacted. If desired the distance between bands may be varied, for example, by making the distance between bands a function of the radial distance from the axis of rotation, as shown in my U.S. Patent No. 2,670,-132, referred to above.

Located about midway between the side members and radiating outwardly from the shaft are conduits **38** which communicate with conduit **24** and provide passage of lighter liquid toward the outer portion of the rotor chamber, or working space. Conduits **38** communicate with manifolds **39** which are parallel to the shaft and which extend from plate **33** to wall **31**. The manifolds **39** serve as antechambers in which separation of a liquid mixture into light and heavy components may take place.

In the specific embodiment shown in detail in FIG. 3, the manifolds **39** utilize two successive concentric rings **36**, as top and bottom walls and require only side walls **41**. There are a series of perforations **42** located in the side walls near the outer cylindrical barrier and a series of perforations **43** located in the inner cylindrical barrier. The perforations provide communication between the outer portion of the manifold and one passageway in the rotor and between the inner portion of the manifold and a passageway interior of said first named passageway and separated therefrom by a barrier to radial flow.

Also located about midway between the side members and radiating outwardly from the shaft are conduits **44** which communicate with conduit **18** and provide passage of heavier liquid into the rotor chamber. Conduits **44** are substantially shorter than conduits **38** since the heavy liquid is not transported as far from the axis of rotation as the light liquid.

Conduits **44** communicate with manifolds **46** which are generally similar to manifolds **39**, except that they are located closer to the axis of rotation. Manifolds **46** also serve as antechambers for separation of a liquid mixture into light and heavy components. There are perforations in manifold **46** which communicate with one or more passageways within the chamber. In one embodiment of this invention all of the perforations in a manifold **46** are in the side walls so that all of the liquid discharges into a single passageway between two bands **36**.

There are a plurality of conduits **47** communicating between the interior of the chamber and annular conduit **19** for discharge of light liquid from the rotor.

In the operation of the above described apparatus in connection with the phenol extraction of lubricating oil, phenol, the heavy liquid is introduced through pipe **22** in cap **20** and passes through conduit **18**, through radial conduits **44** and manifolds **46** and thence into the working space, and particularly into a single passageway through perforations in the side walls of the manifolds. Light liquid comprising a mixture of lubricating oil stock and water, is pumped through pipe **28** in cap **27** and through conduit **24**, through radial conduits **38**, and through the manifolds **39**. In the manifolds there is substantially no flow of light liquid in a radial direction since the manifolds are disposed parallel to the axis. The manifolds are in effect antechambers in which centrifugal separation of the oil and water takes place with the water being forced to the outer ring and the oil being forced to the inner ring which form the upper and lower walls of the manifold. The water passes out of the manifolds through perforations **42** and into the passageway between the concentric rings **36*a*** and **36*b*** which make up the upper and lower walls of the manifold. The oil layer passes through perforations **43** into a passageway interior to said first named passageway and separated therefrom by a barrier, ring **36*b***.

Thus, in this embodiment, the oil is introduced into the working space one ring inward of the water.

The oil passes from passageway to passageway inwardly within the working space while the phenolic extract passes outwardly, producing excellent countercurrent contact, and dissolution of a portion of the lubricating oil into the phenolic extract. When the phenolic extract passes through ring **36*b***, it no longer makes contact with fresh lubricating oil stock, but only with the water antisolvent which springs a portion of the dissolved lubricating oil from the extract. The phenolic extract continues its outward path until it spills over the edge of disc **33** and into space **34**, from which it passes through conduits **37** to annular passageway **25** and through outlet **26** out of the system. The water anti-solvent is miscible with the phenolic extract and is included therein.

The lubricating oil, from which the phenol soluble fraction has been removed passes inwardly from passageway to passageway until it reaches the innermost passageway, from which it passes through conduits **47** to annular conduit **19** and thence through outlet **21** and out of the system.

In the embodiment described above, it is desired to introduce water into a passageway separated by only one barrier from the passageway taking the oil feed. If it should be desired to separate the points of introduction of the two streams by two concentric rings rather than only one, the apparatus can be modified easily as shown in FIG. 5 by eliminating the perforations in the side walls and substituting perforations **42*a*** in ring **36*a*** so that the water passes into a passageway exterior of ring **36*a*** while the oil passes into a passageway interior of ring **36*b***.

If further separation is desired between the points of introduction, tubes may be welded onto orifices **42*a*** or orifices **43**, or both, so that effluent may be conducted through the tubes past additional barriers before being introduced into the desired passageways.

In the introduction of a water stream in the phenolic extraction of lubricating oil, it is fortunate that the water which is heavier than the lubricating oil is desired to be introduced to a point exterior of the point of introduction of the lubricating oil. In other situations it may be desired to introduce the heavier of the liquids to an interior point. In such cases a manifold, such as that shown in FIG. 6 may be used wherein the lighter liquid is discharged through perforations **42*b*** in the lower portion of the side walls while the heavier liquid passes through tubes **48** connecting the outer space within the manifold with the passageway interior of ring **36*b***.

To meet still other process requirements, it may be desired to introduce a third liquid component to a portion of the contact zone relatively close to the center. In such cases, the third liquid component may be introduced through the heavy liquid inlet together with the heavy liquid and may be separated therefrom in manifolds **46**,

provided that the third liquid is immiscible with the heavy liquid and differs from it in density. The manifolds **46** may be modified to the form of FIG. 4, 5 or 6, depending on where is it desired to introduce the respective liquid streams into the contact zone.

Thus, the invention is applicable to the introduction of any third liquid component into a countercurrent centrifugal contacting zone provided that the third liquid component is immiscible in at least one of the feed streams and differs from it in density.

In still another embodiment of this invention the third liquid component need not be one which is desired within the working space, but rather might be one which is associated with one of the feed streams for other process reasons.

For example, it may be desired to treat an oil with an aqueous caustic solution, separate the treated oil from the caustic solution and thereafter bring the oil into countercurrent contact with water. The oil and caustic mixture may be treated as the "light liquid" and passed to manifolds near the periphery of the rotor which have passages into the contact zone for the lighter liquid (the oil) and passages out of the contact zone for the heavier liquid (the caustic). In this manner caustic solution may be kept out of the countercurrent contact zone without the necessity of having a separate piece of separating equipment for use prior to the countercurrent extractor.

While the invention has been described with respect to embodiment in which the antechamber is a longitudinally disposed manifold, it is to be understood that other structures may be used as antechambers, provided that there is no substantial flow therethrough in a radial direction. For example, the radial conduits **38**, instead of leading directly to the manifolds may lead to one or more antechambers disposed laterally to the working space and of expanded cross section normal to the radial direction. They may lead, for example, to a common annular chamber near the periphery of the rotor and the annular chamber, in turn, may have orifices leading to two sets of manifolds, one set for each of the liquid phases separated in the annular chamber. Two sets of orifices at different radial distances from the axis are required in such a modification, one set for each set of manifolds.

The above detailed description of this invention has been given for clearness of understanding only. No unnecessary limitations should be understood therefrom, as modifications will be obvious to those skilled in the art.

I claim:

1. In a centrifugal countercurrent contact apparatus for effecting intimate contact between at least partially immiscible liquids of different densities having a rotor with an interior working space, said working space having a plurality of substantially cylindrical and substantially concentric perforated barriers to radial flow within the rotor, means for supplying lighter liquid to the interior of the rotor in the proximity of its periphery, means for supplying heavier liquid to the rotor in the proximity of its axis, each of said supplying means including stationary and rotatable elements and including a seal therebetween, and means for separately discharging heavier liquid and lighter liquid from said rotor; the improvement which comprises an antechamber in at least one of said supplying means as a rotatable element in said rotor, at least a portion of said antechamber being disposed at a distance from the axis of said rotor, said antechamber being dimensioned and disposed so that flow of liquid therethrough in a radial direction with respect to said rotor is minimized, said antechamber having at least two orifices positioned at different radial distances from the axis of said rotor, one of said orifices leading to a position within the working space of said rotor and the other orifice leading to a second position separated from said first-named position by at least one barrier.

2. In a centrifugal countercurrent contact apparatus for effecting intimate contact between at least partially immiscible liquids of different densities having a rotor with an interior working space, said working space having a plurality of substantially cylindrical and substantially concentric perforated barriers to radial flow within the rotor, means for supplying lighter liquid to the interior of the rotor in the proximity of its periphery, means for supplying heavier liquid to the rotor in the proximity of its axis, each of said supplying means including stationary and rotatable elements and including a seal therebetween and means for separately discharging heavier liquid and lighter liquid from said rotor; the improvement which comprises an antechamber in at least one of said supplying means as a rotatable element in said rotor, at least a portion of said antechamber being disposed at a distance from the axis of said rotor, said antechamber being dimensioned and disposed so that the flow of liquid therethrough in a radial direction with respect to said rotor is minimized, said antechamber having at least two orifices positioned at different radial distances from the axis of said rotor, one of said orifices leading to a position within the working space of said rotor and the other orifice leading to a second position within the working space of said rotor, separated from said first-named position by at least one barrier.

3. In a centrifugal countercurrent contact apparatus for effecting intimate contact between at least partially immiscible liquids of different densities having a rotor with an interior working space, said working space having a plurality of cylindrical and concentric perforated rings within the rotor, means for supplying lighter liquid to the interior of the rotor in the proximity of its periphery, means for supplying heavier liquid to the rotor in the proximity of its axis, each of said supplying means including stationary and rototable elements and including a seal therebetween, and means for separately discharging heavier liquid and lighter liquid from said rotor; the improvement which comprises an antechamber in at least one of said supplying means as a rotatable element in said rotor, at least a portion of said antechamber being disposed at a distance from the axis of said rotor, said antechamber being dimensioned and disposed so that flow of liquid therethrough in a radial direction with respect to said rotor is minimized, said antechamber having at least two orifices positioned at different radial distances from the axis of said rotor, one of said orifices leading to a position within the working space of said rotor and the other orifice leading to a second position within the working space of said rotor, separated from said first-named position by at least one ring.

4. In a centrifugal countercurrent contact apparatus for effecting intimate contact between at least partially immiscible liquids of different densities having a rotor with an interior working space, said working space having a perforated spiral wall which provides a plurality of substantially circular and substantially concentric perforated barriers to radial flow within the rotor, means for supplying lighter liquid to the interior of the rotor in the proximity of its periphery, means for supplying heavier liquid to the rotor in the proximity of its axis, each of said supplying means including stationary and rotatable elements and including a seal therebetween, and means for separately discharging heavier liquid and lighter liquid from said rotor; the improvement which comprises an antechamber in at least one of said supplying means as a rotatable element in said rotor, at least a portion of said antechamber being disposed at a distance from the axis of said rotor, said antechamber being dimensioned and disposed so that flow of liquid therethrough in a radial direction with respect to said rotor is minimized, said antechamber having at least two orifices positioned at different radial distances from the axis of said rotor, one of said orifices leading to a position within the working space of said rotor and the other orifice leading to a second position within the working space of said rotor,

separated from said first-named position by at least one barrier.

5. In a centrifugal countercurrent contact apparatus for effecting intimate contact between at least partially immiscible liquids of different densities having a rotor with an interior working space, said working space having a plurality of substantially cylindrical and substantially concentric perforated barriers to radial flow within the rotor, means for supplying lighter liquid to the interior of the rotor in the proximity of its periphery, means for supplying heavier liquid to the rotor in the proximity of its axis, each of said supplying means including stationary and rotatable elements and including a seal therebetween, and means for separately discharging heavier liquid and lighter liquid from said rotor; the improvement which comprises an antechamber in said lighter liquid supplying means as a rotatable element in said rotor, at least a portion of said antechamber being disposed at a distance from the axis of said rotor, said antechamber being dimensioned and disposed so that flow of liquid therethrough in a radial direction with respect to said rotor is minimized, said antechamber having at least two orifices positioned at different radial distances from the axis of said rotor, one of said orifices leading to a position within the working space of said rotor and the other orifice leading to a second position within the working space of said rotor, separated from said first-named position by at least one barrier.

6. In a centrifugal countercurrent contact apparatus for effecting intimate contact between at least partially immiscible liquids of different densities having a rotor with an interior working space, said working space having a plurality of substantially cylindrical and substantially concentric perforated barriers to radial flow within the rotor, means for supplying lighter liquid to the interior of the rotor in the proximity of its periphery, means for supplying heavier liquid to the rotor in the proximity of its axis, each of said supplying means including stationary and rotatable elements and including a seal therebetween, and means for separately discharging heavier liquid and lighter liquid from said rotor; the improvement which comprises an antechamber in said heavier liquid supplying means as a rotatable element in said rotor, at least a portion of said antechamber being disposed at a distance from the axis of said rotor, said antechamber being dimensioned and disposed so that flow of liquid therethrough in a radial direction with respect to said rotor is minimized, said antechamber having at least two orifices positioned at different radial distances from the axis of said rotor, one of said orifices leading to a position within the working space of said rotor, and the other orifice leading to a second position within the working space of said rotor, separated from said first-named position by at least one barrier.

7. In a centrifugal countercurrent contact apparatus for effecting intimate contact between at least partially immiscible liquids of different densities having a rotor with an interior working space, said working space having a plurality of substantially cylindrical and substantially concentric perforated barriers to radial flow within the rotor, means for supplying lighter liquid to the interior of the rotor in the proximity of its periphery, means for supplying heavier liquid to the rotor in the proximity of its axis, each of said supplying means including stationary and rotatable elements and including a seal therebetween, and means for separately discharging heavier liquid and lighter liquid from said rotor; the improvement which comprises an antechamber in at least one of said supplying means as a rotatable element in said rotor, at least a portion of said antechamber being disposed at a distance from the axis of said rotor, said antechamber being dimensioned and disposed so that flow of liquid therethrough in a radial direction with respect to said rotor is minimized, said antechamber having at least two orifices positioned at different radial distances from the axis of said rotor, the outer of said orifices leading to a position within the working space of said rotor and the inner of said orifices leading to a second position within the working space of said rotor inward of said first-named position and separated therefrom by at least one barrier.

8. In a centrifugal countercurrent contact apparatus for effecting intimate contact between at least partially immiscible liquids of different densities having a rotor with an interior working space, said working space having a plurality of substantially cylindrical and substantially concentric perforated barriers to radial flow within the rotor, means for supplying lighter liquid to the interior of the rotor in the proximity of its periphery, means for supplying heavier liquid to the rotor in the proximity of its axis, each of said supplying means including stationary and rotatable elements and including a seal therebetween, and means for separately discharging heavier liquid and lighter liquid from said rotor; the improvement which comprises an antechamber in at least one of said supplying means as a rotatable element in said rotor, at least a portion of said antechamber being disposed at a distance from the axis of said rotor, said antechamber being dimensioned and disposed so that flow of liquid therethrough in a radial direction with respect to said rotor is minimized, said antechamber having at least two orifices positioned at different radial distances from the axis of said rotor, the outer of said orifices leading to a position within the working space of said rotor and the inner of said orifices leading to a second position within the working space of said rotor outward of said first-named position and separated therefrom by at least one barrier.

9. In a centrifugal countercurrent contact apparatus for effecting intimate contact between at least partially immiscible liquids of different densities having a rotor with an interior working space, said working space having a plurality of substantially cylindrical and substantially concentric perforated barriers to radial flow within the rotor, means for supplying lighter liquid to the interior of the rotor in the proximity of its periphery, means for supplying heavier liquid to the rotor in the proximity of its axis, each of said supplying means including stationary and rotatable elements and including a seal therebetween, and means for separately discharging heavier liquid and lighter liquid from said rotor; the improvement which comprises an antechamber in at least one of said supplying means as a rotatable element in said rotor, said antechamber being elongated in the direction of the axis of said rotor, substantially parallel thereto and displaced therefrom and having at least two orifices positioned at different radial distances from said axis, one of said orifices leading to a position within the working space of said rotor and the other orifice leading to a second position within the working space of said rotor, separated from said first-named position by at least one barrier.

10. In a centrifugal countercurrent contact apparatus for effecting intimate contact between at least partially immiscible liquids of different densities having a rotor with an interior working space, said working space having a plurality of substantially cylindrical and substantially concentric perforated barriers to radial flow within the rotor, means for supplying lighter liquid to the interior of the rotor in the proximity of its periphery, means for supplying heavier liquid to the rotor in the proximity of its axis, each of said supplying means including stationary and rotatable elements and including a seal therebetween, and means for separately discharging heavier liquid and lighter liquid from said rotor; the improvement which comprises an antechamber in at least one of said supplying means as a rotatable element in said rotor, at least a portion of said antechamber being disposed at a distance from the axis of said rotor, said antechamber being positioned laterally of said working space and being of expanded cross section normal to the radial direction so that flow of liquid therethrough in a radial direction with respect to said rotor is minimized, said antechamber hav-

ing at least two orifices positioned at different radial distances from the axis of said rotor, one of said orifices leading to a position within the working space of said rotor and the other orifice leading to a second position within the working space of said rotor, separated from said first-named position by at least one barrier.

11. In a centrifugal countercurrent contact apparatus for effecting intimate contact between at least partially immiscible liquids of different densities having a rotor with an interior working space, said working space having a plurality of cylindrical and concentric perforated rings within the rotor, means for supplying lighter liquid to the interior of the rotor in the proximity of its periphery, means for supplying heavier liquid to the rotor in the proximity of its axis, each of said supplying means including stationary and rotatable elements and including a seal therebetween, and means for separately discharging heavier liquid and lighter liquid from said rotor; the improvement which comprises an antechamber in said lighter liquid supplying means as a rotatable element in said rotor, said antechamber being elongated in the direction of the axis of said rotor, substantially parallel thereto and displaced therefrom and having at least two orifices positioned at different radial distances from said axis, one of said orifices leading to a position within the working space of said rotor and the other orifice leading to a second position within the working space of said rotor, separated from said first-named positioned by at least one ring.

12. In a centrifugal countercurrent contact apparatus for effecting intimate contact between at least partially immiscible liquids of different densities having a rotor with an interior working space, said working space having a perforated spiral wall which provides a plurality of substantially circular and substantially concentric perforated barriers to radial flow within the rotor, means for supplying lighter liquid to the interior of the rotor in the proximity of its periphery, means for supplying heavier liquid to the rotor in the proximity of its axis, each of said supplying means including stationary and rotatable elements and including a seal therebetween, and means for separately discharging heavier liquid and lighter liquid from said rotor; the improvement which comprises an antechamber in said lighter liquid supplying means as a rotatable element in said rotor, said antechamber being elongated in the direction of the axis of said rotor, substantially parallel thereto and displaced therefrom and having at least two orifices positioned at different radial distances from said axis, one of said orifices leading to a position within the working space of said rotor and the other orifice leading to a second position within the working space of said rotor, separated from said first-named position by at least one barrier.

13. In a centrifugal countercurrent contact apparatus for effecting intimate contact between at least partially immiscible liquids of different densities having a rotor with an interior working space, said working space having a plurality of cylindrical and concentric perforated rings within the rotor, means for supplying lighter liquid to the interior of the rotor in the proximity of its periphery, means for supplying heavier liquid to the rotor in the proximity of its axis, each of said supplying means including stationary and rotatable elements and including a seal therebetween, and means for separately discharging heavier liquid and lighter liqud from said rotor; the improvement which comprises an antechamber in said lighter liquid supplying means as a rotatable element in said rotor, said antechamber being elongated in the direction of the axis of said rotor, substantially parallel thereto and displaced therefrom and having a plurality of orifices positioned at approximately the same radial distance from the axis of said rotor and a plurality of orifices positioned at a shorter distance from said axis, said first-named orifices leading to positions within the working space of said rotor and said second-named orifices leading to positions inward of said first-named positions and separated therefrom by at least one barrier.

14. In a method for effecting countercurrent contact between at least partially immiscible liquids of different densities wherein a stream of heavy liquid is introduced into the interior of a centrifugal contacting zone which is partitioned to restrict radial flow, near the axis of said zone, and a stream of light liquid is introduced into said centrifugal contacting zone near the periphery thereof, and each of said streams passes through a seal between stationary and rotating portions of its path, the improvement which comprises providing, as at least one of said streams, a composite of at least partially immiscible liquids of different densities, passing said composite past said seal, centrifugally separating said composite into two fractions of differing density and introducing one of said fractions into the contacting zone at one location ad passing the other of said fractions to a location separated from said first-named location by at least one partition.

15. In a method for effecting countercurrent contact between at least partially immiscible liquids of different densities wherein a stream of heavy liquid is introduced into the interior of a centrifugal contacting zone, which is partitioned to restrict radial flow, near the axis of said zone, and a stream of light liquid is introduced into said centrifugal contacting zone near the periphery thereof, and each of said streams passes through a seal between stationary and rotating portions of its path, the improvement which comprises providing, as at least one of said streams, a composite of at least partially immiscible liquids of different densities, passing said composite past said seal, centrifugally separating said composite into two fractions of differing density and introducing each of said two fractions into said contacting zone at a point separated from the point of introduction of the other by at least one partition.

16. In a method for effecting countercurrent contact between at least partially immiscible liquids of different densities wherein a stream of heavy liquid is introduced into the interior of a centrifugal contacting zone, which is partitioned to restrict radial flow, near the axis of said zone, and a stream of light liquid is introduced into said centrifugal contacting zone near the periphery thereof, and each of said streams passes through a seal between stationary and rotating portions of its path, the improvement which comprises introducing a third liquid component into said contacting zone by blending it with one of said streams with which it is at least partially immiscible and from which it differs in density, passing said blend past said seal, centrifugally separating said blend into a fraction rich in said third component and a fraction poor in said third component and introducing each of said two fractions into said contacting zone at a point separated from the point of introduction of the other by at least one partition.

17. In a method for effecting countercurrent contact between at least partially immiscible liquids of different densities wherein a stream of heavy liquid is introduced into the interior of a centrifugal contacting zone, which is partitioned to restrict radial flow, near the axis of said zone, and a stream of light liquid is introduced into said centrifugal contacting zone near the periphery thereof, and each of said streams passes through a seal between stationary and rotating portions of its path, the improvement which comprises introducing a third liquid component into said contacting zone by blending it with said light liquid stream, said third liquid component being at least partially immiscible with said light liquid and differing in density therefrom, passing said blend past said seal, centrifugally separating said blend into a fraction rich in said third component and a fraction poor in said third component and introducing each of said two fractions into said contacting zone at a point separated from the point of introduction of the other by at least one partition.

18. In a method for effecting countercurrent contact

between at least partially immiscible liquids of different densities wherein a stream of heavy liquid is introduced into the interior of a centrifugal contacting zone, which is partitioned to restrict radial flow, near the axis of said zone, and a stream of light liquid is introduced into said centrifugal contacting zone near the periphery thereof, and each of said streams passes through a seal between stationary and rotating portions of its path, the improvement which comprises introducing a third liquid component into said contacting zone by blending it with said light liquid stream, said third liquid component being heavier than said light liquid and at least partially immiscible therewith, passing said blend past said seal, centrifugally separating said blend into a fraction rich in said third component and a fraction poor in said third component and introducing each of said two fractions into said contacting zone at a point separated from the point of introduction of the other by at least one partition.

19. In a method for effecting countercurrent contact between at least partially immiscible liquids of different densities wherein a stream of heavy liquid is introduced into the interior of a centrifugal contacting zone, which is partitioned to restrict radial flow, near the axis of said zone, and a stream of light liquid is introduced into said centrifugal contacting zone near the periphery thereof, and each of said streams passes through a seal between stationary and rotating portions of its path, the improvement which comprises introducing a third liquid component into said contacting zone by blending it with said light liquid stream, said third liquid component being heavier than said light liquid and at least partially immiscible therewith, passing said blend past said seal, centrifugally separating said blend into a fraction rich in said third component and a fraction poor in said third component, introducing said fraction rich in third liquid component into said contacting zone at one location and introducing said fraction poor in third liquid component into said contacting zone at a location separated from said first-named location by at least one barrier and interior thereof with respect to the axis of said centrifugal contacting zone.

20. In the method for effecting countercurrent extraction of lubricating oil stock containing at least one paraffinic hydrocarbon and at least one non-paraffinic hydrocarbon wherein said lubricating oil stock is introduced into the interior of a centrifugal contacting zone, which is partitioned to restrict radial flow, near the periphery of said zone, and a stream of solvent of the class consisting of phenol and furfural is introduced into said centrifugal contacting zone near the axis thereof, and each of said streams passes through a seal between stationary and rotating portions of its path, the improvement which comprises introducing water into said contacting zone by blending it with said lubricating oil stock, passing said blend past said seal, centrifugally separating said blend into a water-rich fraction and an oil rich fraction, introducing said water-rich fraction into said contacting zone at one location and introducing said oil-rich fraction into said contacting zone at a location separated from said first-named location by at least one barrier and interior thereof with respect to the axis of said centrifugal contacting zone.

References Cited by the Examiner

UNITED STATES PATENTS

1,129,178	2/1915	D'Olier et al.	233—43
2,176,982	10/1939	Thayer	233—15
2,302,319	11/1942	Henry et al.	208—324
2,652,975	9/1953	Angelo	233—15
2,670,132	2/1954	Podbielniak	233—15
2,758,784	8/1956	Podbielniak et al.	233—15
2,852,438	9/1958	Fear et al.	233—15 X
2,857,326	10/1958	Benedict	208—324
2,878,993	3/1959	Podbielniak	233—15
3,053,440	9/1962	Doyle et al.	233—15

FOREIGN PATENTS

324,821	12/1902	France.

M. CARY NELSON, *Primary Examiner.*

ALPHONSO D. SULLIVAN, *Examiner.*

H. LEVINE, H. KLINKSIEK, *Assistant Examiners.*